ALDI

Spend a little Live a lot

User Manual

WORKZONE®

2.2 KW PRESSURE WASHER

Product Info

www.aldi.co.uk

+ VIDEO

MANUAL DEVELOPED IN GERMANY
hanse control
myhansecontrol.com
User-friendly Manual
ID: #05007

Original instructions

Downloaded from www.Manualslib.com manuals search engine

QR codes take you where you want to go quickly and easily

Whether you require **product information**, **spare parts** or **accessories**, details on **warranties** or **aftersales services**, or if you want to watch a **product demonstration video**, our QR codes will take you there in no time at all.

What is a QR code?

A QR code (QR = Quick Response) is a type of matrix that can be read with a smartphone camera and that contains a link to a website or contact details, for example.

Advantage: You do not need to manually enter a website address or contact details.

How it works

To scan the QR code, all you need is a smartphone with QR code reader software and an internet connection. This type of software can be downloaded for free from your app store.

Try it out now

Just scan the QR code with your smartphone and find out more about the ALDI product you have purchased.

Your ALDI Service Portal

All details mentioned above can also be found in the ALDI Service Portal at www.aldi.co.uk.

Product Info

www.aldi.co.uk

+ VIDEO

Depending on your tariff plan you may be charged for the connection.

Downloaded from www.Manualslib.com manuals search engine

Contents

Overview **4**
Package contents/device parts **6**
General information **7**
Reading and storing the user manual 7
Explanation of symbols 7
Safety **9**
Proper use 9
Safety notes 9
First use **14**
Checking the washer and package contents 14
Assembling the washer 15
Operation **16**
Starting the washer 16
Stopping the washer 17
Adjusting the handle 17
Using a self-suctioning washer 17
Using the cleaning attachments **18**
Fitting the spray lance 18
Fitting the turbo nozzle 19
Fitting the Vario pressure nozzle 20
Fitting the wash brush 20
Using the cleaner **21**
Cleaning and maintenance **22**
Cleaning the dirt filter 23
Cleaning the high-pressure nozzle 23
Storage **23**
Troubleshooting **24**
Technical data **27**
Declaration of conformity **28**
Spare parts list **29**
Disposal **30**
Disposing of the packaging 30
Disposing of the washer 30

Dok./Rev.-Nr. 194620_20161208

Downloaded from www.Manualslib.com manuals search engine

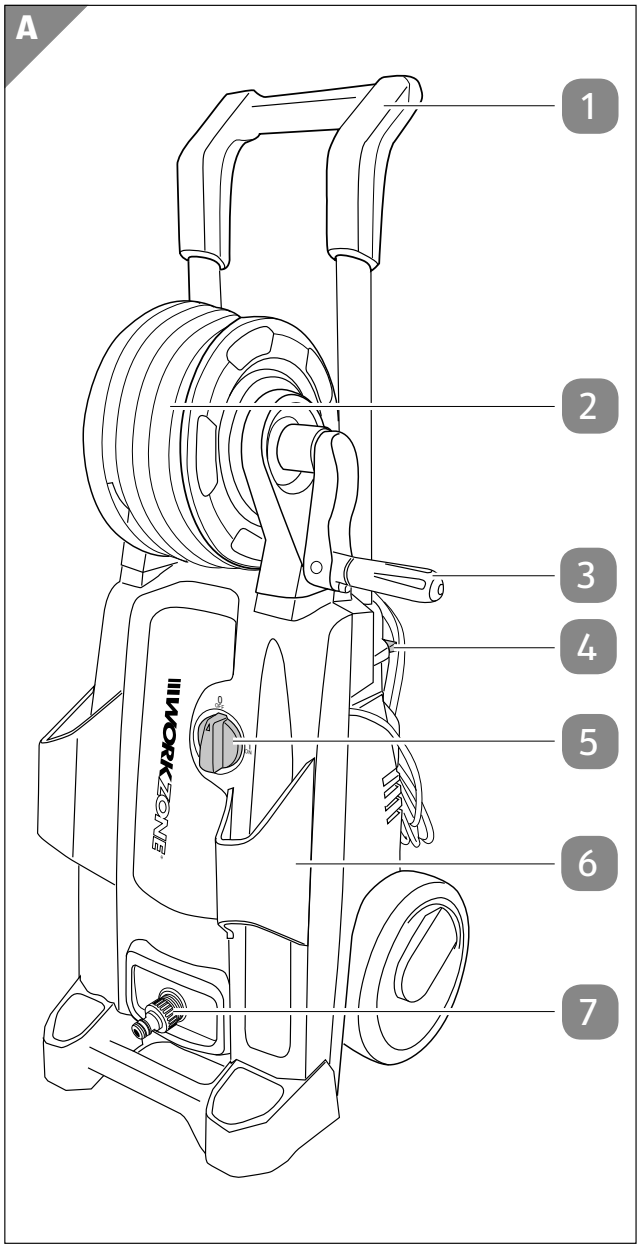

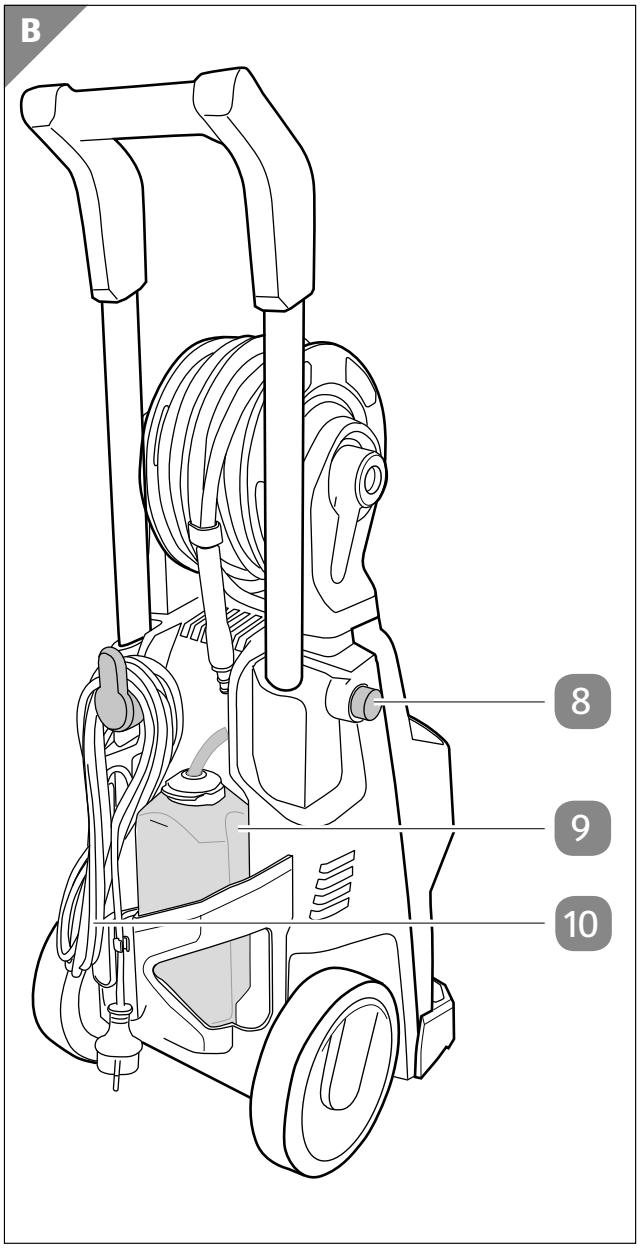

Downloaded from www.Manualslib.com manuals search engine

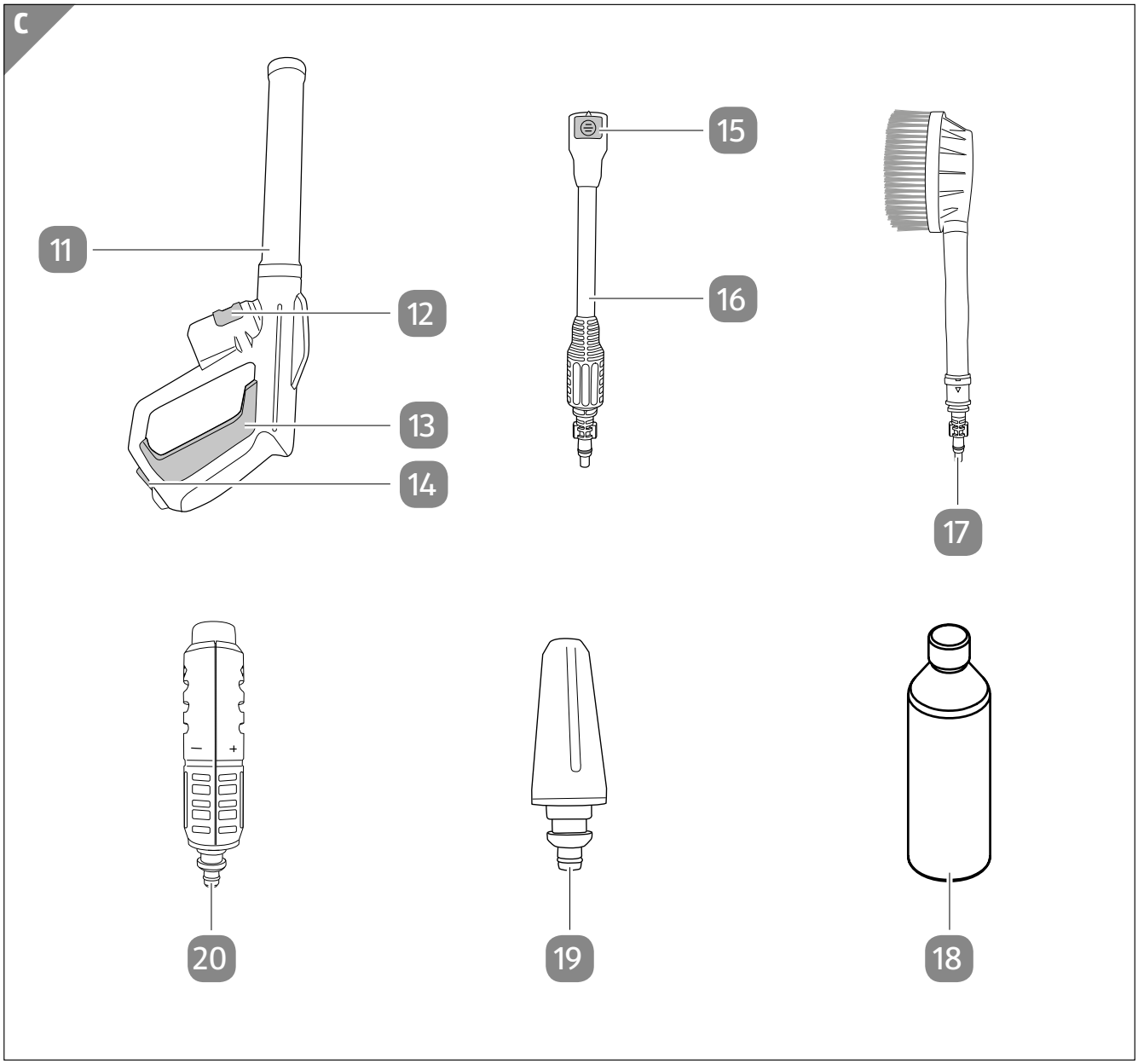

Downloaded from www.Manualslib.com manuals search engine

Package contents/device parts

1. Handle (height-adjustable)
2. High-pressure hose (with hose clamp)
3. Hand crank (foldable)
4. Cleaning pin
5. ON/OFF switch
6. Holder for the spray gun
7. Screw connection for the water inlet hose (with adapter)
8. Button (height adjustment for the handle)
9. Cleaner container
10. Mains cord
11. Spray gun (with a swivelling lance)
12. Spray gun connection (with a quick lock)
13. Trigger
14. Safety lock
15. Quick lock (spray lance)
16. Spray lance
17. Wash brush (rotating)
18. Cleaner
19. Turbo nozzle
20. Vario pressure nozzle

Downloaded from www.Manualslib.com manuals search engine

General information

Reading and storing the user manual

This user manual accompanies this 2.2 kW pressure washer (referred to below only as “washer”).
It contains important information on start-up and handling.

Before using the washer, read the user manual carefully, particularly the safety instructions. Failure to comply with this user manual may result in severe injury or in damage to the washer.

The user manual is based on the standards and rules in force in the European Union. When abroad, you must also observe country-specific guidelines and laws.

Keep the user manual for future use. If you pass the washer on to third parties, be sure to include this user manual.
You can also request this user manual in PDF format from our after sales support.

Explanation of symbols

The following symbols and signal words are used in this user manual, on the washer or on the packaging.

⚠ WARNING!	This signal symbol/word designates a hazard with moderate degree of risk which may lead to death or severe injury if not avoided.
NOTICE!	This signal word warns against potential damages to property.

This symbol provides you with useful additional information regarding start-up or handling.

Downloaded from www.Manualslib.com manuals search engine

Caution! Read the user manual prior to start-up!

This symbol indicates that the mains plug must be disconnected from the power supply immediately if the cord is damaged, twisted or knotted, if it has been severed, or if the washer is left unsupervised, even for a short period of time.

This symbol indicates that the high-pressure jet may never be pointed directly at persons, animals, the washer or the electrical components.

This symbol indicates that the washer must not be connected directly to the drinking water network.
If necessary, use it only with a water backflow preventer or an inlet hose set approved in accordance with IEC 61770.

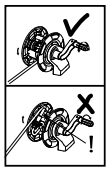

This symbol indicates that to wind up the high-pressure hose the crank for the hose reel may be turned only anticlockwise. Winding it clockwise may damage the high-pressure hose and the washer.

This symbol indicates the loudness of the washer during operation.

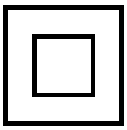

This symbol indicates that the washer complies with the protection class II.

The symbol on the rear side of the washer shows the recommended storage of the accessory parts.

The symbol “GS” indicates that the product has been tested for safety. Products labelled with this symbol meet the requirements of the German Product Safety Act (ProdSG).

Downloaded from www.Manualslib.com manuals search engine

The LGA-tested quality certificate certifies consistent quality corresponding to specific criteria that has been tested by an independent body. It confirms the safety and usability of the product and therefore its overall quality.

Declaration of conformity (see chapter “Declaration of conformity”): Products marked with this symbol meet all applicable Community regulations for the European Economic Area.

Safety

Proper use

The washer is designed only for cleaning façades, patios, walkways, garden tools, machines, vehicles, tools, etc. It is only intended for private use and is not suitable for commercial use.

Use the washer only as described in this user manual. Any other use is deemed improper and may result in damage to property or even personal injury. The washer is not a children’s toy.

The manufacturer or vendor accepts no liability for damage caused by improper or incorrect use.

Safety notes

⚠ WARNING!

Risk of electric shock!
A faulty electrical installation or excessive mains voltage may result in an electric shock.

- An experienced electrician must connect the device to the mains and the connection must meet the requirements of IEC 60364-1.
- It is recommended that the power supply for this washer be supplied either via a fault-current circuit breaker that interrupts the power supply as soon as the leakage current to

Downloaded from www.Manualslib.com manuals search engine

the earth exceeds 30 mA for 30 ms, or that it be equipped with an earth tester.

- Connect the washer only if the mains voltage of the socket corresponds to the rating plate specification.
- Connect the washer only to an easily accessible socket to allow the washer to be disconnected from the mains quickly in the event of a fault.
- Do not operate the washer if it is visibly damaged or if the mains cord or mains plug is defective.
- If the supply cord of the washer is damaged, to avoid risks it must be replaced by the manufacturer or its after sales support or by a person with similar qualifications.
- Do not open the housing; instead, have a qualified professional carry out the repairs. Contact a qualified workshop for this. Liability and warranty claims are waived in the event of repairs performed by the user, improper connection of the device or incorrect operation.
- Only parts that comply with the original device information may be used for repairs. This washer contains electrical and mechanical parts which are essential for providing protection against sources of danger.
- Do not operate the washer with an external timer or separate telecontrol system.
- Do not immerse the washer or the mains cord or mains plug in water or other liquids.
- Never touch the mains plug with damp hands.
- Never pull the mains plug out of the socket by the mains cord; instead, always do so by taking hold of the mains plug.
- Never use the mains cord as a carrying handle.
- Keep the washer, mains plug and mains cord away from open flames and hot surfaces.
- Lay the mains cord so that it does not pose a tripping hazard.
- Do not kink the mains cord and do not lay it over sharp edges.

Downloaded from www.Manualslib.com manuals search engine

- Never store the washer such that there is a risk of it falling into a tub or a basin.
- Never reach to retrieve an electrical device if it has fallen in water. In such a case, immediately disconnect the mains plug from the socket.
- Make sure that children do not insert any objects in the washer.
- Always switch the washer off and pull the mains plug out of the socket when you are not using it, when you intend to clean it, to replace parts, or in the event of a fault.

⚠ WARNING!

Danger for children and persons with impaired physical, sensory or mental capacities (e.g. partially disabled persons, older persons with reduced physical and mental capacities) or lack of experience and knowledge (e.g. older children).

- This washer may be used by persons with impaired physical, sensory or mental capacities or those lacking experience and knowledge if they are supervised or have been instructed in how to safely use the washer and have understood the risks associated with operating it.
- This washer must not be used by children. Children must be supervised to ensure that they do not play with the device.
- Do not leave the washer unattended during operation.
- Do not let children play with the packaging. Children may get caught in it when playing and suffocate.
- Do not allow children to play with the cleaner. Children could swallow small parts and choke.

⚠ WARNING!

Danger of explosion!

The spraying of flammable liquids can cause an explosion.

- Do not spray any flammable liquids and do not use the washer in explosive environments.

Downloaded from www.Manualslib.com manuals search engine

⚠ WARNING!

Risk of electric shock!

Unsuitable extension cords may be dangerous and could result in an electric shock.

- If an extension cord is used, the mains plug and coupling must be water-tight and must never be placed in water. Mains plug and coupling must bear the IP44 label. Use a cord reel that keeps the socket at least 60 mm above the ground.

⚠ WARNING!

Risk of injury!

High-pressure jets may be dangerous if used improperly.

- The high-pressure jet must not be pointed at persons, active electrical equipment or at the washer itself.
- Do not use the washer within range of other persons unless they are wearing protective clothing.
- Do not point the washer at yourself or other persons to clean clothing or footwear.
- Before first start-up, familiarise yourself with the control elements and safety functions of the washer and the spray gun.
- When operating the washer, wear suitable personal protective equipment (PPE) such as safety footwear, safety gloves, protective helmets with visor, ear protection, etc.
- Before you begin any kind of cleaning, check the work area for objects that could pose a risk. Remove all objects that you could stumble over from the work area, e.g. toys or garden furniture.
- Ensure that you have a stable stance, especially considering the possibility of kickback when you depress the trigger of the spray gun.
- Be particularly careful when cleaning tyres. Car tyres and tyre valves could be damaged or pop if handled improperly.

Downloaded from www.Manualslib.com manuals search engine

Discolouration of the tyres indicates the first signs of damage. Damaged vehicle tyres and tyre valves pose a risk to life. Keep the high-pressure jet at a distance of at least 30 cm!

- The high-pressure washer must not be used by children or untrained persons.

⚠ WARNING!

Risk of injury!

Even if you use this washer in compliance with applicable regulations, there are always residual risks. The following risks associated with the construction and design of this washer may occur:

- Injury to health attributed to hand and arm vibrations if the washer is used over a prolonged period of time or if it is not guided and maintained properly.
- Eye injury due to flying parts or particles of dirt blown about by the high-pressure jet. Always wear suitable eye protection when working with the washer.
- Skin injury from accidental contact with the high-pressure jet or from flying parts or particles of dirt blown about by it. Always wear suitable protective equipment, clothing and firm footwear when working with the washer.
- Injury to hearing due to noise exposure. Wear suitable ear protection to prevent damage to your hearing when working with the washer.

NOTICE!

Risk of damage!

Improper handling of the washer may result in damage to the washer.

- Do not use the washer if a connection line or important parts of the washer are damaged, e.g. safety equipment, high-pressure hoses, spray gun, etc.

Downloaded from www.Manualslib.com manuals search engine

- High-pressure hoses, fittings and couplings are important for guaranteeing the safety of the device. Only use high-pressure hoses, fittings and couplings recommended by the manufacturer.
- Only use original spare parts from the manufacturer or approved by the manufacturer to guarantee the safety of the device.
- This washer was developed to use the cleaners delivered or recommended by the manufacturer. Using other cleaners or chemicals can affect the safety of the washer.
- Place the washer on a stable, level surface. Operate it in an upright position only and never in a horizontal position.

First use

Checking the washer and package contents

NOTICE!

Risk of damage!
If you are not cautious when opening the packaging with a sharp knife or other pointed objects, you may quickly damage the washer or the accessories.

- Be very careful when opening.

1. Carefully take the washer and the accessories out of the packaging.
2. Check to make sure that the delivery is complete (see **Fig. A, B,** and **C**).
3. Check whether the washer or the individual parts exhibit damage. If any damage is visible, do not use the washer. Contact the manufacturer at the service address specified on the warranty card.

Downloaded from www.Manualslib.com manuals search engine

⚠ WARNING!

Risk of injury!
The washer could be inadvertently activated and cause injury.

- Ensure that the washer is disconnected from the mains before you assemble the washer.

Assembling the washer

⚠ WARNING!

Health hazard!
The washer must not be directly connected to the drinking water network because the return flow of water poses a risk to the drinking water.

- Use a water backflow preventer or an inlet hose set approved in accordance with IEC 61770.
- Cleaning car motors and other objects contaminated by oil and various lubricants is permissible only on such areas where the waste water is diverted by an oil separator.
- Water that has flowed through the backflow preventer is considered unfit for drinking.

1. Insert the plug connection of the high-pressure hose 2 in the connection 12 on the handle of the spray gun 11.
2. Insert any given cleaning nozzle onto the spray gun. See section “Using the cleaning attachments”.
3. Connect a water inlet hose with a quick-lock coupling (not included in the scope of supply) with the screw connection for the water inlet hose 7. The water temperature may amount to no more than 40 °C.
4. Insert the mains plug into a properly installed socket with an earthing contact and alternating voltage in accordance with the washer’s rating plate.

Downloaded from www.Manualslib.com manuals search engine

Operation

NOTICE!

Risk of damage!
Improper handling of the washer may result in damage to the washer.

- Familiarise yourself with all control elements before starting up the washer. Before each use, make sure that the washer is functional.
- Ensure that all parts of the washer are securely attached.
- Ensure that the water connection and the high-pressure hose are not leaking.

Starting the washer

NOTICE!

Risk of damage!
Using the washer without water could result in damage to the washer.

- Never operate the washer without water, as dry operation could damage the pump. Use a water filter if the supplied water is contaminated.

1. Fully open the water tap for the water intake.
2. Unlock the safety lock 14 of the spray gun 11 by pushing 🔓 downwards.
3. Press the trigger 13 until a steady stream of water is dispensed. Then let go of the trigger.
4. To switch on the washer, move the ON/OFF switch 5 to **ON**. The high-pressure pump starts to run.
5. To start the cleaning work, hold the spray gun tightly with both hands and press the trigger again.

Downloaded from www.Manualslib.com manuals search engine

Stopping the washer

1. Release the trigger 13. The high-pressure pump will stop immediately.
2. Move the ON/OFF switch 5 to **OFF**.
3. Close the water tap for the water inlet.
4. Push the trigger until the pressure in the washer has been released.
5. Lock the trigger by pushing downwards onto the safety lock 14.

Adjusting the handle

The handle can be adjusted in two positions. The washer is supplied with a lowered handle.

1. Press the button 8 for the height adjustment and pull the handle 1 upwards until it locks into place. The washer can be used and easily moved in this position.
2. Press the button again to lower the handle and push the handle downwards until it locks into place.

Using a self-suctioning washer

Alternatively, you can also supply the high-pressure washer from an open reservoir (water butt, industrial water tank).

Use a suction hose with a suitable suction basket to protect the pump from foreign bodies. We recommend using a high-quality suction hose made of reinforced material, the diameter of which should be at least 13 mm and the maximum length 3 m. You can achieve the best results by integrating a non-return valve and filter in addition to the suction basket.

To connect the suction hose, please proceed as follows:

1. Place the high-pressure washer in close proximity to the water source on a stable and level surface. Observe the maximum recommended suction height of 0.5 m.

Downloaded from www.Manualslib.com manuals search engine

2. Fill the suction hose with water and allow all of the entrapped air to escape.
3. Connect the suction hose to the washer. Remove all attachments.
4. Switch on the washer and press the trigger 13 until the washer discharges a steady stream of water. If this is not achieved within 2 to 3 minutes, switch the washer off and check the suction hose for entrapped air.
5. Switch off the washer and connect the desired attachment.
6. Operate the washer as usual.

In addition, please refer to the user manual of the relevant accessory part.

Using the cleaning attachments

Fitting the spray lance

⚠ WARNING!

Risk of injury!
The high-pressure jet is very hard and can inflict injury.

– Start using the washer by working at a substantial distance and reduce this as needed.

The spray lance 16 is equipped with a quick lock 15 to assist in changing the cleaning attachments.

1. Insert the spray lance into the spray gun 11 in such a way that the end of the quick lock points away from the spray gun.
2. To fix the spray lance, push it slightly downwards and turn it clockwise at the same time.

Removing the spray lance

1. Stop the washer and move the ON/OFF switch 5 to **OFF**.
2. Push the trigger 13 until the pressure in the washer has been released.

Downloaded from www.Manualslib.com manuals search engine

3. Push the spray lance 16 slightly in the direction of the spray gun 11 and turn the spray lance anticlockwise at the same time.
4. Remove the spray lance.

Fitting the turbo nozzle

NOTICE!

Risk of damage!

When using the turbo nozzle, there is a very high risk of damaging sensitive surfaces.

- Be very careful when using the turbo nozzle during cleaning.
- Start using the washer by working at a substantial distance and reduce this as needed.

The turbo nozzle 19 produces a rotating high-pressure jet that can also get rid of stubborn dirt.

1. Place the turbo nozzle on the quick lock 15 of the spray lance in such a way that the small rectangular elevation fits exactly into the rectangular recess in the spray lance 16.
2. Press the turbo nozzle down firmly on the spray lance.
   The yellow button of the quick lock clicks once the nozzle is positioned correctly.

Removing the turbo nozzle

1. Stop the washer and move the ON/OFF switch 5 to **OFF**.
2. Push the trigger 13 until the pressure in the washer has been released.
3. Press the yellow button of the quick lock 15 on the spray lance 16 and pull off the turbo nozzle 19.

Downloaded from www.Manualslib.com manuals search engine

Fitting the Vario pressure nozzle

The Vario pressure nozzle 20 produces a fan beam at a 30° angle.

1. Place the Vario pressure nozzle on the quick lock 15 of the spray lance in such a way that the small rectangular elevation fits exactly into the rectangular recess in the spray lance 16.
2. Press the Vario pressure nozzle down firmly on the spray lance. The yellow button of the quick lock clicks if the Vario pressure nozzle is positioned correctly.
3. Turn the Vario pressure nozzle to set the desired water pressure.

Removing the Vario pressure nozzle

1. Stop the washer and move the ON/OFF switch 5 to **OFF**.
2. Push the trigger 13 until the pressure in the washer has been released.
3. Press the yellow button of the quick lock 15 on the spray lance 16 and pull off the Vario pressure nozzle 20.

Fitting the wash brush

The wash brush 17 is suitable for cleaning surfaces delicately.
In the process, the high-pressure jet is used to operate the wash brush; the water strikes the surface to be cleaned only at lower pressure.
The rotating wash brush head achieves the cleaning effect and the removed dirt is washed away with the water.

1. Remove the spray lance 16, see section “Removing the spray lance”.
2. Put the wash brush onto the spray gun 11.
3. To fix the wash brush, push it slightly downwards and turn it clockwise at the same time.

Downloaded from www.Manualslib.com manuals search engine

Removing the wash brush

1. Stop the washer and move the ON/OFF switch 5 to **OFF**.
2. Push the trigger 13 until the pressure in the washer has been released.
3. Push the wash brush 17 slightly in the direction of the spray gun 11 and turn the wash brush anticlockwise at the same time.
4. Remove the wash brush.

Using the cleaner

NOTICE!

Risk of damage!

Using cleaners other than those recommended by the manufacturer can affect the safety of the washer.

- Only use cleaners supplied or recommended by the manufacturer.

⚠ WARNING!

Risk of chemical burns!

Cleaners that come into contact with the skin, eyes or mucous membranes can cause burns.

- Do not allow the cleaners to come into contact with the skin, eyes and mucous membranes.
- In the event of contact with the cleaners, immediately flush the applicable areas with plenty of clean water and consult a physician if necessary.

Switch off the washer before adding the cleaner to the washer.

Downloaded from www.Manualslib.com manuals search engine

The washer is equipped with a device for the automatic supply of cleaners for the water jet.

1. Prepare the cleaning solution by diluting the cleaner 18 1 part to 10 with water.
2. Lock the trigger 13 by pushing downwards onto the safety lock 14.
3. Take the cap off of the cleaner container 9 and pull the hose out.
4. Fill the cleaning solution into the cleaner container.
5. Guide the hose back into the cleaner container and screw the cap back on.
6. Use the washer with the desired cleaning attachment.

Cleaning and maintenance

⚠ WARNING!

Risk of electric shock!
Cleaning and maintenance of the washer while it is connected to the mains may lead to an electric shock.

- Each time before cleaning or maintenance work, switch the washer off and disconnect it from the mains.
- Do not clean the washer with a high-pressure jet.

NOTICE!

Risk of damage!
Improper cleaning may damage the washer.

- Do not use any aggressive cleaners, brushes with metal or nylon bristles or sharp or metallic cleaning utensils such as knives, metal sponges and the like. These can damage the surfaces.

1. Before cleaning, pull the mains plug out of the socket.
2. Wipe the washer and the accessories off with a slightly damp cloth.

Downloaded from www.Manualslib.com manuals search engine

Cleaning the dirt filter

The washer is equipped with a dirt filter to protect the pump. If the dirt filter is not kept clean, the flow of water to the washer will be restricted and the pump could be damaged.

1. Check the dirt filter after each use.
2. Screw off the adapter on the screw connection for the water inlet hose 7 and take out the dirt filter.
3. Rinse out the dirt filter until it is free of dirt and deposits.
4. Insert the dirt filter again and screw the adapter on the screw connection for the water inlet hose tightly.

Cleaning the high-pressure nozzle

1. Remove the cleaning pin 4 from the rear side of the washer.
2. Use the cleaning pin to clean the high-pressure nozzles of the cleaning attachments.
3. Re-insert the cleaning pin in the rear of the washer.

Storage

NOTICE!

Risk of damage!

There is always some leftover water in the washer and the pump that could result in damage to the washer.

- Do not store the washer at temperatures below the freezing point, as this may result in frost damage.
- If you take the washer out of commission for a prolonged period of time, empty the cleaner container and let the water drain out of the high-pressure hose.
- Store the washer upright in a dry, well ventilated location protected from access by children.
- Wind the high-pressure hose 2 using the hand crank 3 anticlockwise onto the hose reel.

Downloaded from www.Manualslib.com manuals search engine

- Secure the end of the hose with the hose clamp.
- Wind the mains cord 10 around the cord holder at the rear side of the device.
- Store the accessory parts in the compartments provided for this purpose on the front and rear side of the washer.

Troubleshooting

⚠ WARNING!

Risk of injury!
Tampering with the washer could pose a risk to life from electric shock, damage the washer and void warranty claims.

- Do not make any modifications to the washer.

The following table provides assistance in the event of malfunctions. If the solutions provided here are unsuccessful, contact the manufacturer or an authorised service centre at the service address specified on the warranty card.

Fault	Cause	Solution
No function	The power supply is interrupted.	Check the power connection, mains cord 10 and fuse; have repairs performed by an electrician if necessary.
	The washer is switched off.	Move the ON/OFF switch 5 to **ON**.
	Individual components are defective.	Contact the manufacturer or an authorised service centre at the service address specified on the warranty card.

Downloaded from www.Manualslib.com manuals search engine

Fault	Cause	Solution
Washer is working, but keeps cutting out.	The mains cord 10 is damaged.	Contact the manufacturer or an authorised service centre at the service address specified on the warranty card.
	An internal electrical connection has become loose.	
	The ON/OFF switch 5 is defective.	
No pressure or only slight pressure is built up.	There is air in the washer.	Operate the washer without connecting the spray gun 11 until the water is dispensed without bubbles.
	There is no water or an insufficient supply of water.	Check your water connection.
		Check the water inlet hose for leaks or blockage.
	The dirt filter is clogged.	Clean the dirt filter; see section “Cleaning the dirt filter”.
	The washer draws in air.	Check for leaks in the water inlet hose.

Downloaded from www.Manualslib.com manuals search engine

Fault	Cause	Solution
Large fluctuations in pressure	The high-pressure nozzle is clogged.	Clean the high-pressure nozzle; see section “Cleaning the high-pressure nozzle”.
	There is only insufficient water pressure.	Check the water pressure.
	The water inlet hose is kinked.	Check the water inlet hose.
The washer has a leak.	The connections of the water inlet hose are loose.	Tighten the adapter on the screw connection for the water inlet hose 7 and the screw connection on your water tap until hand-tight.
	The pump or the internal connections have a leak.	Contact the manufacturer or an authorised service centre at the service address specified on the warranty card.

Downloaded from www.Manualslib.com manuals search engine

Technical data

Model:	Q1W-SP05-2200A
Article number:	94313
Power consumption:	2200 W
Operating pressure:	max. pressure: 15 MPa (150 bar)
Nominal pressure:	11 MPa (110 bar)
Input pressure/temperature max.:	1.0 MPa (10 bar)/40 °C
Power consumption:	9 A
Sound power level:	L_{WA} 94 dB (uncertainty K_{WA}: 4 dB)
Guaranteed sound power level:	L_{WA} 98 dB
Vibration emission value:	≤ 2.5 m/s^2 (uncertainty K: 1.5 m/s^2)
Water consumption:	max. 450 l/h
Impact force of the water jet:	13 N
Length of power cord:	5 m
Cord specification:	H05VV-F 2×1.0 mm^2
Cleaner container capacity:	1 l
IP Code:	IPX5
Protection class:	II
Weight	
without accessories:	10.7 kg
incl. accessories:	12.6 kg
Motor specification:	Single-phase alternating current motor, 230 V~/50 Hz
Pump specification:	Aluminium with safety valve; 3-piston pump; piston made of hardened stainless steel; wobbling disc material made of metal

The values for noise and vibration emissions were determined in accordance with EN 60335-2-79:2012.

Downloaded from www.Manualslib.com manuals search engine

Declaration of conformity

EU Declaration of Conformity

We,

MEROTEC GmbH
D-47877 Willich, Hanns-Martin-Schleyer Str. 18a, Germany

herewith declare that our product

High Pressure Water Cleaner
Model no. Q1W-SP05-2200 und Q1W-SP05-2200A

complies with the following directives:

Machinery Directive 2006/42/EC
EMC Directive 2014/30/EU
Noise Directive 2000/14/EC
RoHS 2011/65/EU

Applied harmonized standards:
EN 60335-1:2012+A11:2014
EN 60335-2-79:2012
EN 55014-1:2006+A1:2009+A2:2011
EN 55014-2:1997+A1:2001+A2:2008
EN 61000-3-2:2006+A1:2009+A2:2009
EN 61000-3-3:2013
EN 62233:2008

Document representative:
Dirk Wohlrab
MEROTEC GmbH

Datum: 01.12.2016
Authorised Signature:

Ronald Menken
General Manager
MEROTEC GmbH

Downloaded from www.Manualslib.com manuals search engine

Spare parts list

Spare part	Part number (see package contents page 6)	Order number
Hand crank (foldable)	3	1172B10
Cleaning pin	4	1142005
Adapter for the water inlet	7	1151C01
Cleaner container	9	1175022
Cleaner container cap	n/a	1119003
Spray gun (with a swivelling lance)	11	01106BG
Spray lance	16	1106B50
Wash brush (rotating)	17	01118BQ
Cleaner	18	1151C14
Turbo nozzle	19	1106B51
Vario pressure nozzle	20	1106B52
Right wheel	n/a	1151C07
Left wheel	n/a	1151C05

Downloaded from www.Manualslib.com manuals search engine

Disposal

Disposing of the packaging

Dispose of the packaging separated into single type materials. Dispose of cardboard and carton as waste paper and film via the recyclable material collection service.

Disposing of the washer

(Applicable in the European Union and other European states with systems for the separate collection of reusable waste materials)

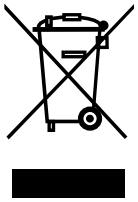

Old devices must not be disposed of with household waste!

If the washer can no longer be used, every **user is required by law to dispose of old devices separately from their household waste**, e.g. at a collection point in their community/borough. This ensures that old devices are recycled in a professional manner and also rules out negative consequences for the environment. For this reason, electrical equipment is marked with the symbol shown here.

Downloaded from www.Manualslib.com manuals search engine

Spend a little Live a lot

Great care has gone into the manufacture of this product and it should therefore provide you with years of good service when used properly. In the event of product failure within its intended use over the course of the first 3 years after date of purchase, we will remedy the problem as quickly as possible once it has been brought to our attention. In the unlikely event of such an occurrence, or if you require any information about the product, please contact us via our helpline support services, details of which are to be found both in this manual and on the product itself.

GB IRE

PRODUCED IN CHINA FOR:

ALDI STORES LTD. PO BOX 26, ATHERSTONE
WARWICKSHIRE, CV9 2SH.

ALDI STORES (IRELAND) LTD.
PO BOX 726, NAAS, CO. KILDARE.
Visit us at www.aldi.com

AFTER SALES SUPPORT

94313

GB **+441904727501** IRE **+35319022605**

support@coreservice.co.uk

MODEL:
Q1W-SP05-2200A

04/2017

3 YEARS WARRANTY

Downloaded from www.Manualslib.com manuals search engine